CM110
A designerly perspective on IoT
a growing systems approach

Thomas van Hemert
Teun Keusters
Tim Treurniet

M2.1

Table of contents

Figure 1: Both modules of the final prototype

Introduction

Our homes are already filled with internet connected devices. Assuming current trends continue, this number will increase, as will the amount of personal data generated through these devices. This data flow is not tangible, nor is it visible, which makes it difficult to get a grasp of what is happening. We believe we can aid in this issue by making a connection between digital and physical (Campenhout, 2013).

In this paper, we introduce a system that utilizes embodied interaction to control our internet connected devices. By means of tags on each device and a rich interaction controller, users can secure their devices with our vault and gain access when required. We create a connection between these protected devices and other elements of the house using a modular growing system. When a breach of any kind occurs to these protected devices, our system warns its users through the elements connected to its system. As an example, we show how lighting control can be implemented. A separate controller controls brightness and color of lights in the house. When this controller is physically added to the vault, a breach to the system will show through the lights, by flashing red. This paper will discuss relevant literature and the design process of aforementioned system.

Figure 2: Scanning device created during assignment 1

Background

The meaning of words change over time. This is called semantic change and is the result of, among others, technological developments (Blank & Koch, 1999). The definition of security according to the Merriam Webster Dictionary is “the quality or state of being secure: such as a: freedom from danger :safety, b: freedom from fear or anxiety, c: freedom from the prospect of being laid off” (Safety, n.b.). Of course, this is still true in the broader sense of the word but in detail, it encompasses more than it ever did. Before the arrival of the internet, security could be provided by locked houses or vaults, weapons for self defense or law enforcement agencies. It can be said that the definition of safety has been affected greatly in the past decades spearheaded by the rise of the internet. The past decades the internet has led to the emergence of an additional aspect of security, namely digital security and a more recent component is IoT security (Sivaraman et al, 2015).

More and more devices are connected to the internet and data streams that arise with them become increasingly difficult to oversee and secure. This is where our concept comes into play. Our concept aims to create an embodied experience for securing personal intangible belongings through meaningful interaction. The idea of the concept is a physical vault with which you can interact to lock your internet connected devices.

For centuries, one of the most common ways of creating safety for yourself, others or belongings, was through closing a lock with a key [?]. As of today, we still use them practically every day. The relation between the key and the lock and the value they represent are deeply engraved in the social fabric of the western culture. Because of this strong and deep rooted connection to safety, we chose to use the key together with a vault as a metaphorical base for our design. By doing so, we maintain a combination of semantic and direct approach (Djajadiningrat et al., 2002), where the key and vault are elements of the semantic approach and the other shapes, details and functionalities will be elements of the direct approach.

The explained metaphor has another advantage. As explained, digital security becomes increasingly relevant as more and more devices in the home environment are connected to the internet. However, digital security is rather an intangible thing to manage compared to closing a lock with a key. Computer security software is nothing unfamiliar, though more recent developments in the realm of internet connected products bring forth the problem that the security of IoT devices becomes harder to manage (Sivaraman et al., 2015). Often, companies do not include security measures in their IoT products or they are hard to secure because of the different software packages and distributed touchpoints of all the IoT devices in a household. A physical embodiment of the key and the vault metaphor to secure all IoT devices, offers rich interaction (Frens, 2006). Opening a vault by turning a key in the keyhole represents the locking and unlocking of the IoT devices from the internet. The richness in this interaction is that the intangible nature of internet security is translated to a familiar physical turn of a key.

In light of the courses subject of growing systems, we feel that there is is a major challenge in designing rich embodied interaction. Inherent to growing systems are

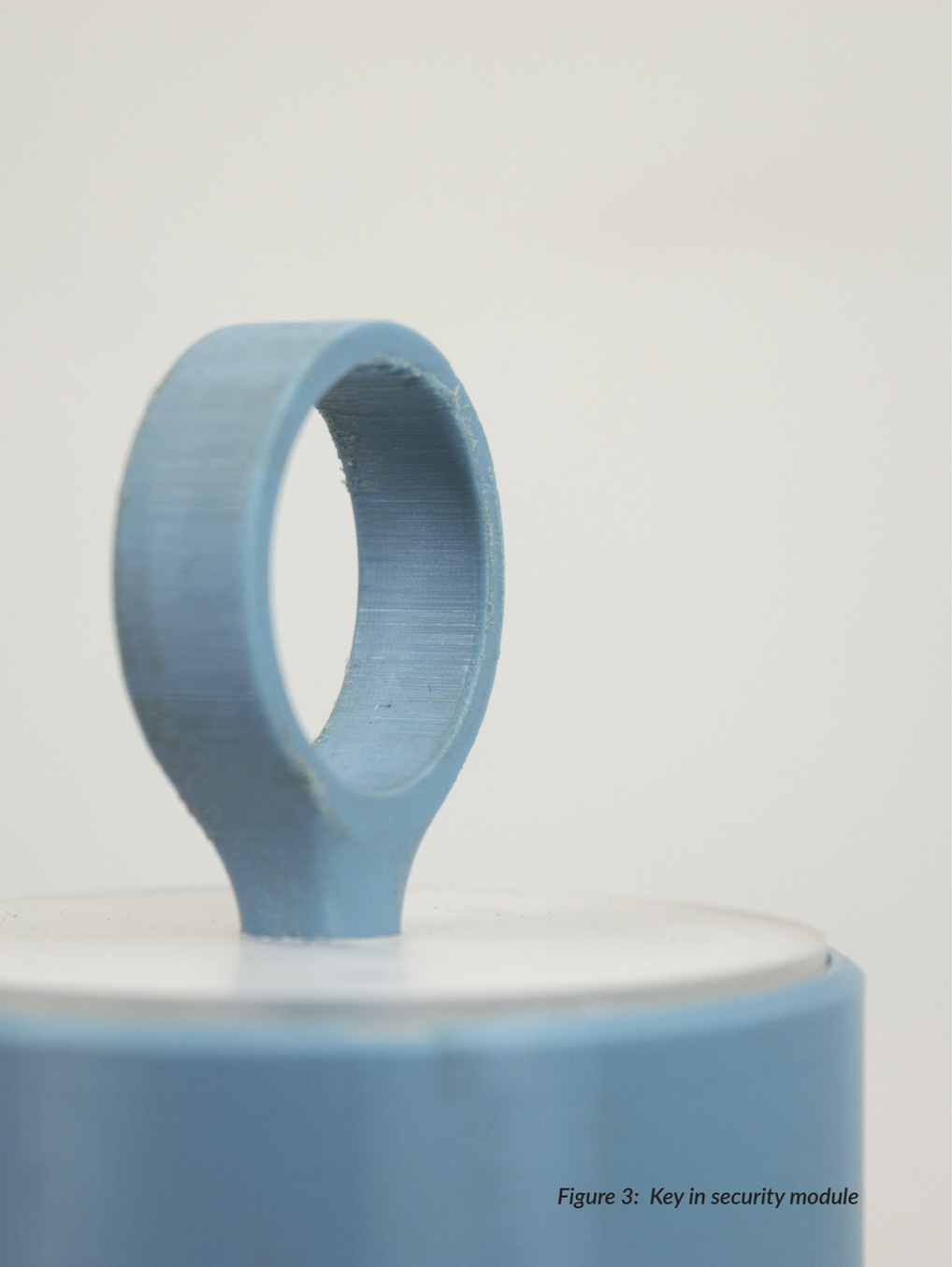

Figure 3: Key in security module

endlessness, versatility and unpredictability, which are, in our view, somewhat contradictory to the notion of designing richness in interaction. The crux lies in systems that can suffice for implementations of unknown functionalities with dedicated rich interactions, that lie in the (far) future. To achieve growing systems in a tangible context, Frens stated 4 design approaches (2017). Yet, in our view, none of these 4 approaches seem to be the optimal approach in designing a tangible interface for a growing system. When designing for growth, the need for a generic interface seems to become stronger. On the contrary, a generic interface soon seems to become less tangible. We believe that the key to designing for rich, growing systems lies in finding the perfect balance between specialized tangible controls and genericity.

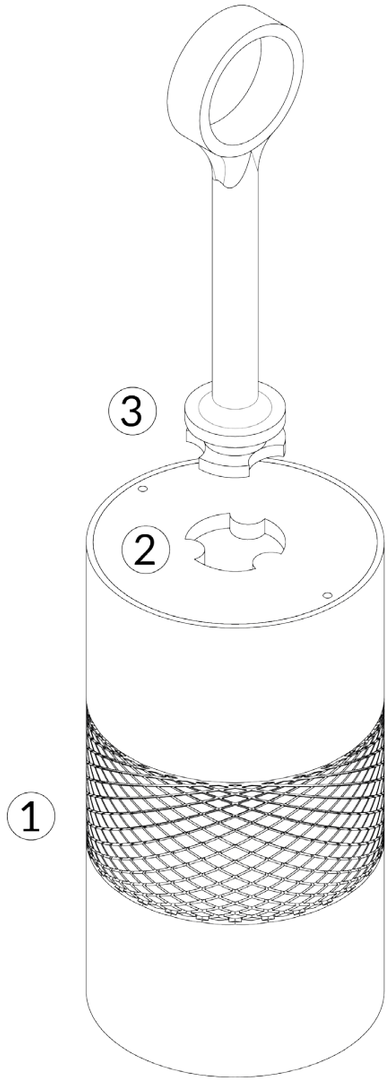

Figure 4: Scanning device created during assignment 2

Assignment 2

Concept description

In our first iteration, we designed a system aimed at securing internet connected devices. The system consists of four elements: a scanner, a vault, a key and tags. The colored tags should be added to all devices that require securing, such as smartphones and laptops, but also smart fridges, windows and locks. In this way the tags are a tangible static representation of the information that is relevant for our system (Holmquist et al., 1999). By covering a tag with the matching cavity in the scanner (figure 6), the tag and its connected device are stored in the system, which is visualized by a light on top of the scanner, matching the tag's color. A grip texture on the surface of the scanner invites for grabbing (figure 4, number 1).

After scanning all devices the user intends to secure, the scanner can be placed in the dedicated vault, on a central spot in the house. The user can then lock the vault (figure 5) by placing the scanner (figure 4, number 3) in the vault (figure 4, number 2), after which the system will disconnect the devices from the internet. The vault will close by means of a diaphragm with an opening in the middle. When closed, this opening will reveal the keyhole on the scanner, allowing the user to open the vault again when desired. After initial scanning, opening the vault will be sufficient for accessing the scanned devices. The lights indicating which tags are stored in the system will be visible. The scanner can be taken from the vault when the user wishes to either remove devices from the system or add new ones. The system can be seen as centralized, using the vault as a base station, with distributed elements such as the scanner, key and the tags.

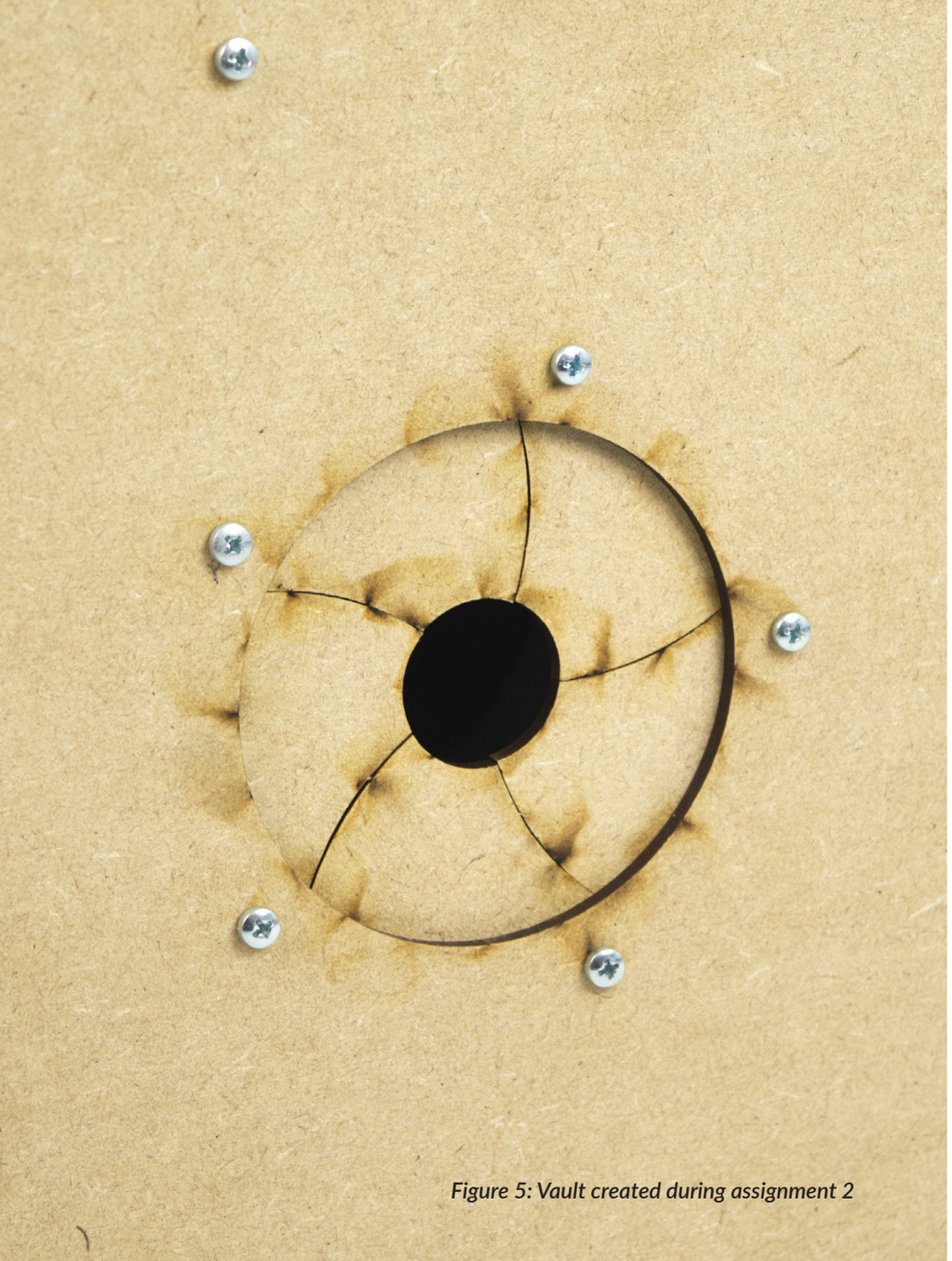

Figure 5: Vault created during assignment 2

Design rationale

This system uses a physical key to access digital systems, an object that has been used for locking and securing for thousands of years, to symbolize security (Marcus, 1998). Besides using the key as a metaphor, it is in this concept the only means to unlocking the stored devices, thus serving a practical purpose.

Since we propose a tangible way of interacting with data, a connection should be made between these elements. Our system uses colored LEDs for this purpose, corresponding with the color of the tags, a matching method proposed by Christ (1975). The color matching is mainly used for feedback after scanning a tag, since the matching light will become visible on the scanner, and for checking which devices are currently scanned (e.g. after opening the vault). The LED can also be seen as a temporarily dematerialization of the tag as described by van Campenhout et al. (2013). When storing a device, a digital, dematerialized copy of the tag is presented on the top of the device.

The scanner features certain elements in its form to indicate action possibilities, a simple matching system generally taught in early years of childhood (Fisher, Hirsh-Pasek, Newcombe & Golinkoff, 2013). This form matching method is applied in the scanning aspect of the concept. Since a physical connection is required for scanning in our concept, this possibility, as well as how this should happen, is made clear by the prototype's form. In the case of scanning, the dome shaped tags perfectly fit a cavity in the bottom of the scanner. The same principle is applied for the key. By creating a larger surface that enters the keyhole, the shape of that keyhole becomes larger and easier to recognize, thus connect to the shape of the key. Contrary to regular locks, our key features three different positions that fit the slot, for ease of use.

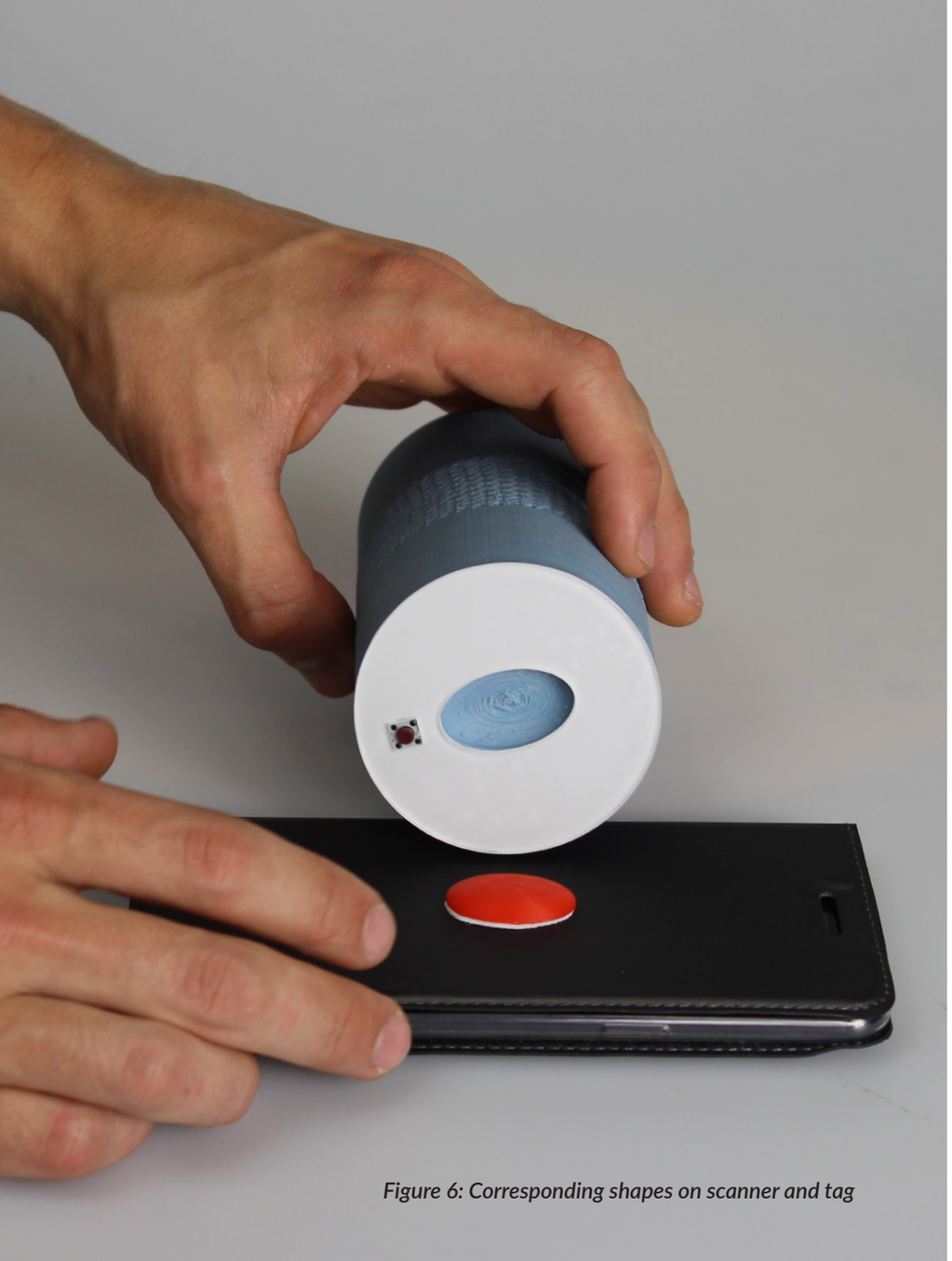

Figure 6: Corresponding shapes on scanner and tag

Reflection & iteration opportunities

When reviewing the first iteration, we conclude that certain interesting insights have been achieved, but unnecessary difficulties have been created. From a practical perspective, a system consisting of multiple objects seems tedious. Perhaps similar results could be achieved by experimenting with a less complicated system in the next iteration. Furthermore, while a central base station properly visualizes a vault, it is unfit for mobile devices such as phones and laptops when used outside the house. We conclude that we could maintain a secure system without the vault, by viewing the scanner as a personal item that can be carried by the user.

In the current concept, feedback after scanning a tag is somewhat limited, the only reaction being a LED switching either on or off. Furthermore, it automatically changes state after placing the scanner on top of it, thus limiting interaction possibilities and resulting in a rather major update to the system, potentially without the user's intention. From a usability perspective, this issue should be addressed in the next iteration, focussing on improved feedback of the system's reaction to user input.

Regarding the formgiving of the scanner, the cylindrical works well for a handheld device, but certain details might cause confusion. Although the textured surface allows for easy gripping, it also instructs users where to grab the device. In the current version, the texture is only applied on the middle section of the prototype. Although this element of the prototype could be considered aesthetically pleasing, it falsely instructs users to grab the prototype at that section.

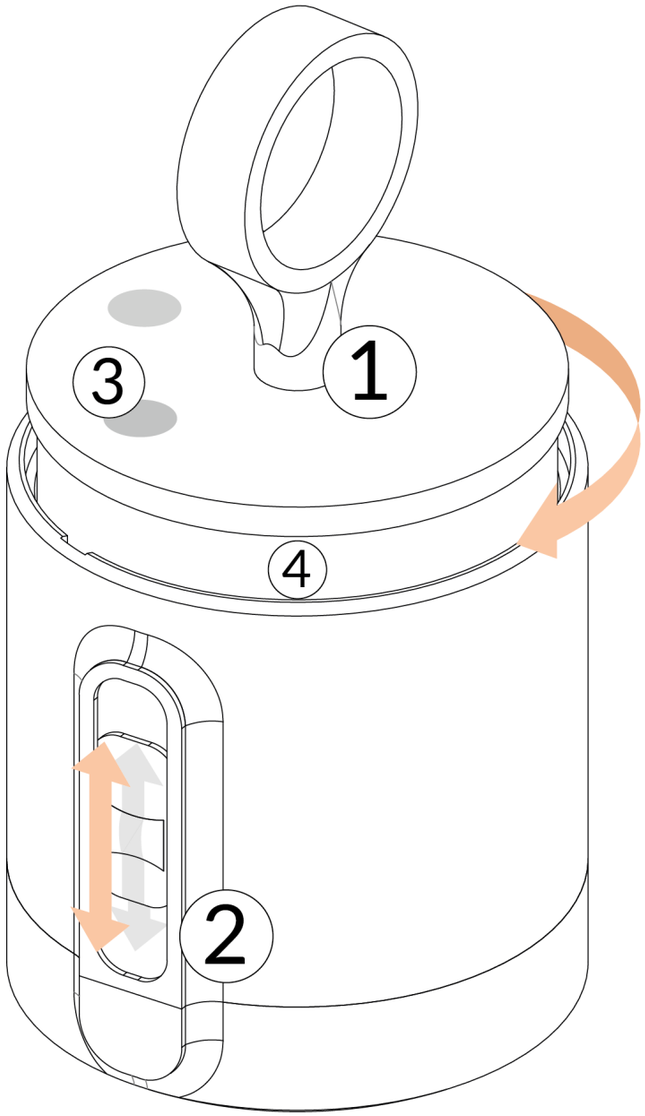

Figure 7: Security module assignment 3

Assignment 3

Changes to existing concept

After reflecting on the results of our second assignment, we decided to make a few changes to the initial concept. First of all, we concluded that it would be very time-consuming for a user to walk all the way to the location of the vault and back, each time a product needs to be stored to or removed from the vault. Instead, we decided to turn the vault into a personal handheld device, making it a scanner and vault in one. Accordingly, our approach shifted from partially centralized to distributed. Because of this change, it would not make sense anymore to have a separate key, since the device itself is already mobile. However, we wanted to maintain the metaphor of a key and a vault. and thus we decided to keep the appearance and interaction (turning to open) of an actual key in a lock, yet the key is now stuck in the device. This is illustrated in figure 7, number 1. Additionally we added a slider to the device (figure 7, number 2). This slider is used when tags are scanned, to make the action of scanning more expressive.

Concept description

Security module

The security module (figure 7) is used to secure IoT devices when they are not in use. Devices can be scanned through tags, which are attached to their housing. Scanning is done by placing the bottom of the module over the tags. When a device is already stored in the vault, the slider (figure 7, number 2) is actuated to move upwards, whereis it moves downwards when the device is yet not stored in the vault. By sliding the slider to the opposite side, a user can either 'pull-in' the tags or 'push' it out of the vault. If a device is scanned, an animation is displayed in the ring at number 4 in figure 7, indicating that the device is stored in the vault, subsequently an LED lights up on top of the vault (figure 7, number 3). Each color belongs to a device, which is determined by the color of the tags attached to the IoT-device, these colors will always correspond with the colors of the LEDs. Figure 7 displays the vault opened; the upper part is lifted. In this open state, all IoT devices have access to the network and therefore are unsecured. When the user closes the vault by pushing the top-module inwards, the IoT devices that are stored in the vault will disconnect from the internet.

Growing system

In order to enable the security module to grow and gain more functionalities and controls, we decided to split it in two: a top part and a bottom part. The bottom part contains the scanning aspect, while the top part is the rest of the security module. The two parts can be pulled apart in order to add another module in between. This extra module can be the light controller we already designed, but also another controller that might be developed in the future. The number of modules to add is unlimited, which we will explain later.

Light module

As second topic we chose light. The controller we designed is illustrated in figure 8. We designed it in such a way that it fits in between the two parts of the security module, but it can also be used independently. This module consist of two halves (rings), with an illuminated center part (figure 8, number 1). By adjusting the rings, both the brightness and warmth of the light in

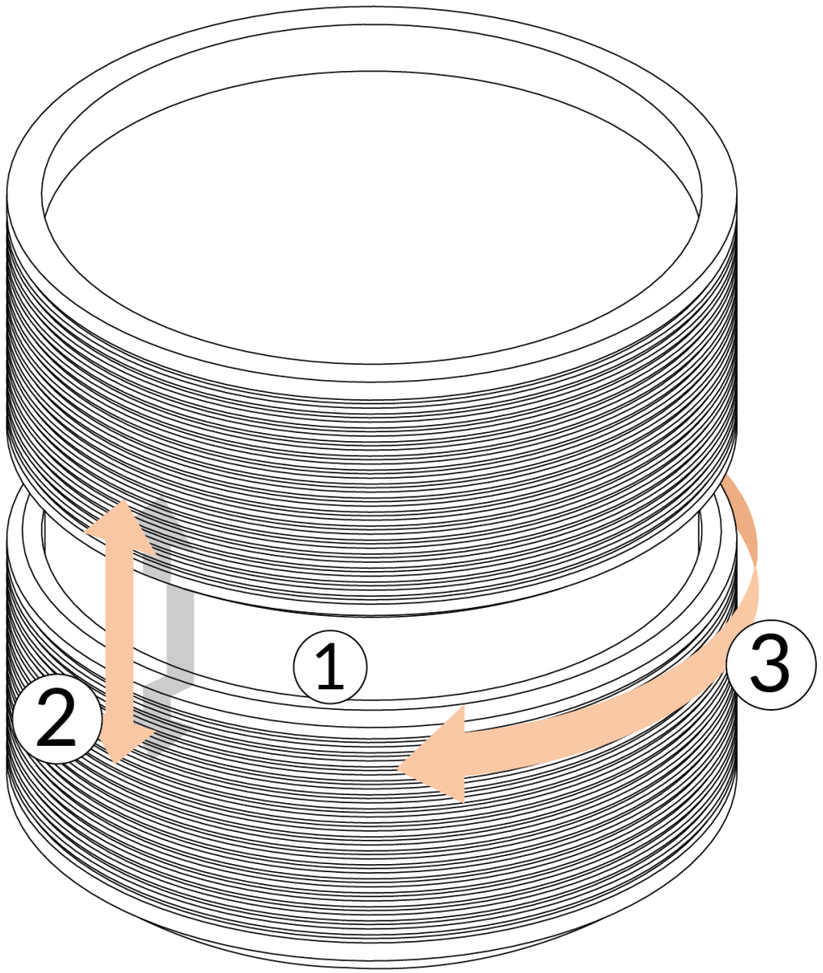

Figure 8: Light module assignment 3

the room can be tweaked. This effect is displayed in the illuminated center part and is directly mapped to the lights in the room. The brightness can be changed by pushing the rings together or pulling them further apart (figure 8, number 2). This way, the user can physically adjust the amount of light coming out of the controller. To adjust the warmth of the light, the rings can be rotated relative to each other (figure 8, number 3).

Emergent functionality

When the modules are joined, as illustrated in figure 9, the emergent functionality emerges. When someone tries to force oneself into one of your devices either digitally (hacking) or physically (e.g. IoT-locks), the lights connected to the light controller as well as the controller itself will start to flash, informing you about the situation.

Design rationale

An important choice we made was how we wanted to include growth in our concept, which we ultimately did through modularity. From a business point-of-view it seemed interesting to try and create a controller that could grow in infinite ways, although we limited ourselves to a single add-on for the sake of this elective. This way, the product could be more interesting for companies, because the possibility remains to add new modules to the security module after its initial release date. We feel that a modular approach facilitates infinite growth in the best way, without making compromises on richness of the interactions. This is true when new modules will be solely designed for a certain functionality with its corresponding rich and embodied interaction. Unfortunately, modularity comes with certain disadvantages as well. First of all, each new add-on would make the product bigger and therefore less usable. Also, like Frens pointed out, modularity makes it harder to provide feedforward for an emergent functionality (2017). We believe this effect becomes stronger when more modules are added.

We will elaborate on choices with regards to the form of and interaction with the product, starting with the security module. The module consists of a separate top (display) and bottom (for scanning), but this had some consequences for the design. First of all, the relation between the top and bottom part could become less clear, because there would be other modules in between these parts. To solve this, we decided to extend the part on which the switch (figure 7, number 2) is attached, so that it is positioned on both elements. Through this form we hope to keep the relation between these two parts clear.

We introduced the slider to make the process of storing in or discarding from the vault easier to understand. We chose to actuate the slider to make sure that is would always be positioned in the right way. When the vault is placed over a tag, the slider will slide upwards if the device is already stored in the vault and vice versa. This way, sliding downwards is the only possible action when a device is already stored in the vault, while sliding upwards is the only possible when the device is not stored yet.

To clearly indicate whether the vault is opened or

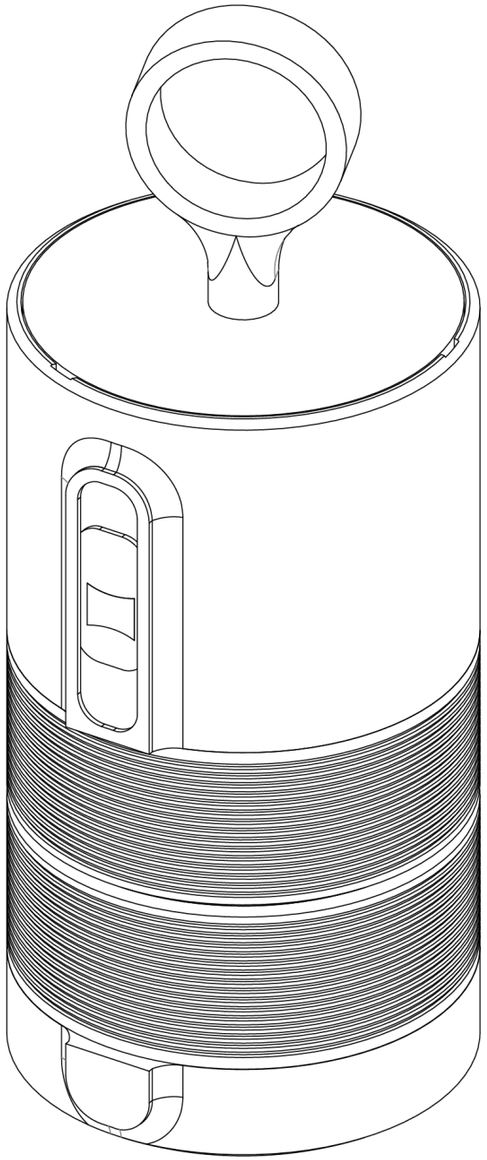

Figure 9: Both modules connected

closed, we made it possible lift out a part of the device out when the key is turned. To clarify that a device is scanned, we show an animation.Light flows from the bottom to the top, before it lights up at the very top. This way, we wanted to visualize how the information travels from the bottom of the device to the top and into the vault. We also considered to include the animation in the light controller, but decided not to do so, because this could possibly make the relation between the top and bottom less clear.

For the light controller we wanted to enable the user to change the brightness and warmth of the light. It was relatively easy to find an intuitive way to adjust the brightness, which is no more than physically covering the light that is emitted by the controller. We had more trouble in finding the right way to communicate warmth. The most prominent reason for this is the fact that temperature of light is virtually impossible to translate to a physical interaction as it is inherently intangible. We concluded that the only way to make a user aware of this concept is by showing them how the light changes. Therefore, we decided to make this more of a trial-and-error control, where the user has to start rotating the control randomly in order to change the warmth of the light. By this means we try to make the user think through doing as defined by Klemmer et al. (2006).

We wanted the light controller (which is showed in figure 8) to communicate the possible interactions (rotating and covering the light in the center) by its form. Since we were working with rings, and those rings were shaped to fit perfectly into a hand, we assumed that the affordance of rotating the rings was the most dominant and therefore the most intuitive interaction of both (Norman, 1999).Sliding the two halves to cover/reveal the light that is hidden in the center felt less intuitive and therefore we tried to emphasize on providing feedforward for this action. Like illustrated in figure 8 and figure 10 both rings contain horizontal grooves, which provide extra grip in the direction of the movement that the two halves can make. This way, we aim to convey in which direction the device should be pulled or pushed. We also created a chamfer where the two halves come together to emphasize the fact that those are separate components.

Reflection

There are some aspects about our design that are open for some improvements. The main point of improvement lies within the hierarchy of controllers. When we decided to shift to a distributed approach, we did not realize that this would also cause some problems within the hierarchy of controllers. This problem comes to light when two users try to lock the same device or try to control the same lights. The product should be improved with a clear protocol for such situation and this would probably also mean that there should be some kind of 'ownership' over certain products, to keep dishonest people from locking your devices.

Like we already described multiple times throughout this report there are quite some things to mention about the modularity, and especially about our choice to split the security module in two parts. This split was

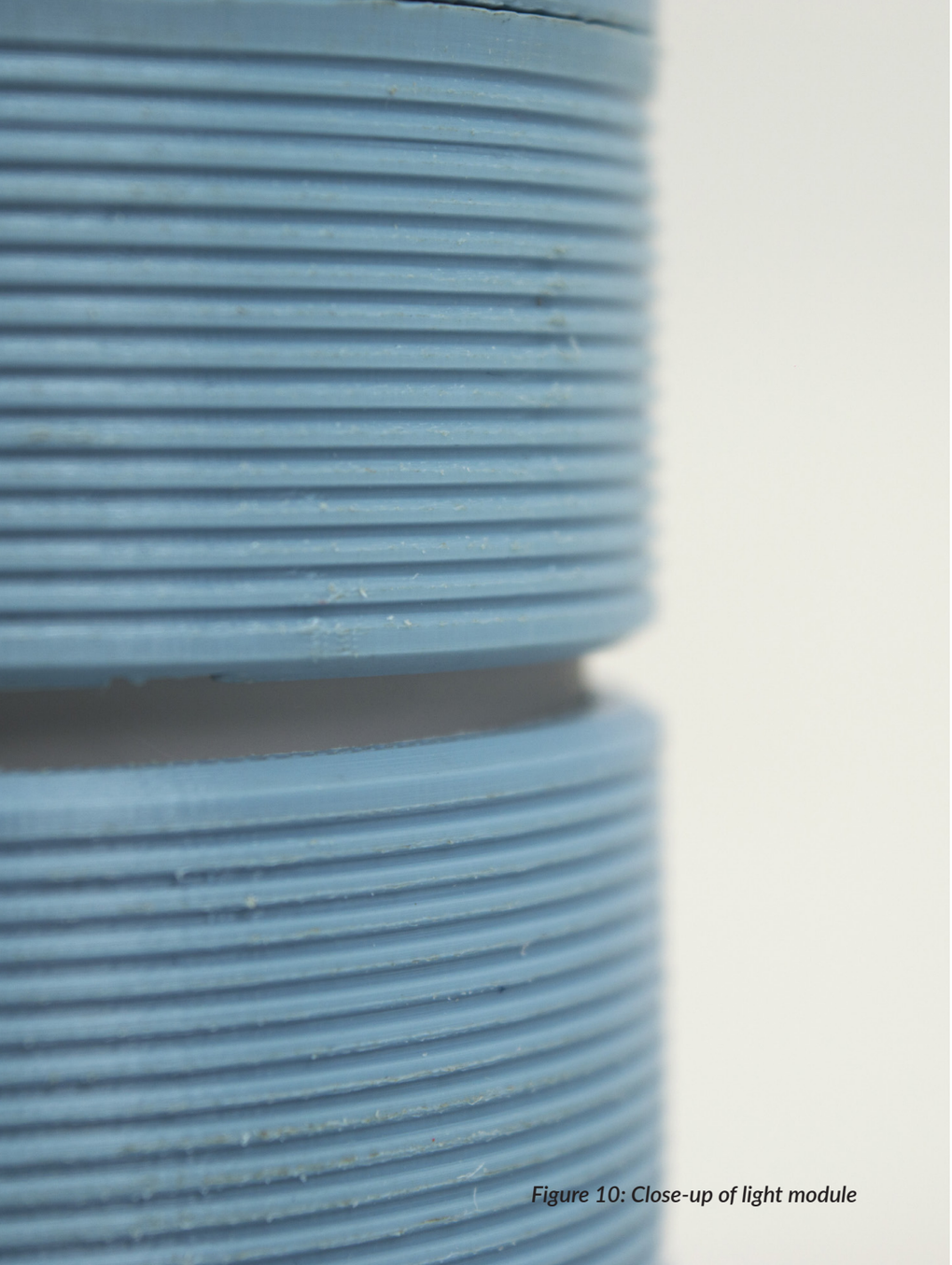

Figure 10: Close-up of light module

a consequence of our requirements to have the scanning part at the bottom of the system, while the vault should be positioned at the top. These requirements were a result of the form we chose during our first assignment. Possibly, we would not have had this problem if we had taken the time to again review the form at the beginning of assignment 3. Potentially, the entire product would have been more convincing if we would not have chosen to create a top and bottom module.

We asked ourselves the question "can an app do the same?". In some sense, you could argue that the answer to that question is positive. We have two main arguments why we argue for the opposite. First, an app does not have a tangible interaction like a physical key or vault and is in fact limited to the two dimensional design space of the digital screen. We argued for a separate tangible device, because the key and vault have always been tangible throughout their existence and it broadened our spectrum of design opportunities. This includes the opportunity to incorporate inherent feedback, which would have not been possible in an app. Second, our personal files and accounts can very well be considered 'belongings'. A common way to secure your belongings are the aforementioned key and vault, which has been our line of thought in the ideation process. We feel we add value by making a physical manifestation of the security of home IoT, because the process of securing becomes a more accessible and conscious activity for the user (Dourish, 2004). This in turn might result in more trust and confidence towards the security system, in comparison to an automated program that operates as a background task and only rarely asks for user input.

We tried to get as much feedforward in our product as possible, for this reason we put grooves and chamfers in the light controller, we made the tags and the bottom of the vault in matching shapes and we made the size of the controllers so that it fits nicely in a hand. However, most of the feedforward in our product is inherent feedforward as defined by Wensveen et al. (2004). Some of the feedforward could be classified as augmented feedforward, for example the use of a key leads to opening the vault. Looking back, we could have invested some more time in looking for other ways to provide feedforward.

References

Bakker, S., & Niemantsverdriet, K. (2016). The interaction-attention continuum : considering various levels of human attention in interaction design. International Journal of Design, 10(2), 1-14.

Blank, A., & Koch, P. (1999). Historical semantics and cognition. Berlin: Mouton de Gruyter.

Brock, A. M. (2017, June). Tangible Interaction for Visually Impaired People: why and how. In World Haptics Conference-Workshop on Haptic Interfaces for Accessibility (p. 3).

Christ, R. E. (1975). Review and analysis of color coding research for visual displays. Human factors, 17(6), 542-570.

Djajadiningrat, T., Overbeeke, K., & Wensveen, S. (2002). But how, Donald, tell us how?: on the creation of meaning in interaction design through feedforward and inherent feedback. In Proceedings of DIS'02 (pp. 285-291). ACM.

Dourish, P. (2004). Where the action is: the foundations of embodied interaction. MIT press.

Frens, J.W. (2006). Designing for Rich Interaction: Integrating Form, Interaction, and Function. Unpublished Doctoral Dissertation, Eindhoven University of Technology, Eindhoven, the Netherlands. (retrievable from http://www.richinteraction.com)

Frens, J. (2017). Designing for Embodied and Rich Interaction in Home IoT. Proceedings of the Conference on Design and Semantics of Form and Movement - Sense and Sensitivity, DeSForM 2017. doi:10.5772/intechopen.71130

Fisher, K. R., Hirsh-Pasek, K., Newcombe, N., & Golinkoff, R. M. (2013). Taking shape: Supporting preschoolers' acquisition of geometric knowledge through guided play. Child development, 84(6), 1872-1878.

Holmquist, L., Redström, J., & Ljungstrand, P. (1999). Token-based access to digital information. In Proceeding of the 1st International Symposium on Handheld and Ubiquitous Computing (pp. 234-245). Berlin, Germany: Springer-Verlag.

Klemmer, S. R., Hartmann, B., & Takayama, L. (2006). How bodies matter: five themes for interaction design. In Proceedings of DIS'06 (pp. 140-149). ACM.

Marcus, A. (1998, April). Metaphor design for user interfaces. In CHI 98 conference summary on Human factors in computing systems(pp. 129-130). ACM.

Norman, D. A. (1999). Affordance, conventions, and design. interactions, 6(3), 38-43.

Ross, P. R., & Wensveen, S. A. (2010). Designing behavior in interaction: Using aesthetic experience as a mechanism for design. International Journal of Design, 4(2).

Security. (n.d.). Retrieved from https://www.merriam-webster.com/dictionary/security

Sivaraman, V., Gharakheili, H. H., Vishwanath, A., Boreli, R., & Mehani, O. (2015). Network-level security and privacy control for smart-home IoT devices. 2015 IEEE 11th International Conference on Wireless and Mobile Computing, Networking and Communications (WiMob). doi:10.1109/wimob.2015.7347956

Van Campenhout, L. D. E., Frens, J. W., Overbeeke, C. J., Standaert, A., & Peremans, H. (2013). Physical interaction in a dematerialized world. International Journal of Design, 7(1), 1-18.

Weiser, M. (1991). The computer for the 21st century. Scientific american, 265(3), 94-104.

Wensveen, S.A.G., Djajadiningrat, J.P., and Overbeeke, C.J. (2004) Interaction Frogger: A Design Framework to Couple Action and Function through Feedback and Feedforward. Proceedings of DIS'04, Cambridge, USA. pp. 177-184.

Reflection Thomas

During my bachelor of Industrial Product Design at the Hague University and during my master of Industrial Design at Eindhoven University of Technology, I have been working on the aesthetics of design. I have always aimed to design each and every detail of the projects I was working on. The ability to reason for every single element of a design and being thorough in doing so, is in my view a necessity for designers and a valuable asset to have. At first, this skill was present on a very (too) low level but increased significantly during my projects and electives at the master of Industrial Design. I feel that I have taken a big leap forward in my development as a designer since then.

The theory presented in this elective and the associated projects, complemented my knowledge on design and at the same time, changed my point of view on design. However, both broadened my horizon and made me more critical towards aesthetics of deign. I wil explain why and how.

Since my entrance at the masters course, my knowledge on the digital part of design has lifted from nothing to a basic level. This comprises mainly practical knowledge on electronic components and programming micro controllers. However, I often fell short in my efforts to create meaningful interaction, which was the result of insufficient knowledge on the theoretical matter. This is the reason why I enrolled for this elective and I feel that it matched my expectations quite well. Not only my knowledge has expanded but I feel more enabled than before to take a critical point of view towards my own design, existing design and design in general. The latter was caused by the fact that, during this elective, I realized that present interaction styles (e.g. digital screens), which I priorly presumed to work fine, still might have (much) room for improvements on interaction level.

My vision on design is that products equipped with modern technology - in particular electronic devices - are often overly present in terms of aesthetics and interaction style. It would have been sufficient to have them designed to better blend in with the environment asking only for attention when required (Bakker & Niemantsverdriet, 2016). This course introduced me to a considerable amount of approaches that support me in my vision. The theory of affordances by Gibson and later adopted by Norman (1999), was new to me and in fact quite useful in pursuing my vision. The idea of inviting users to perform certain actions by designing the right shape, truly appeals to me. Affordances have the potential to create seamless interaction appealing to only to the right level of the user. The paper on aesthetic interaction (Ross & Wensveen, 2010) was complementing the idea of affordances. To take it a step further, the link to interaction in growing systems with a shape changing approach seems quite logical to me.

Lastly, in theory, affordances prove to be working. However, I do not think this theory can be applied to the real world as modern electronic devices generally have too much functionalities to create a physical manifestation for each of them, like Djajadiningrat et al. (2002) explained. Still, I really much value the theory of affordances together with the general topic of the course but I genuinely feel that there is a grey area between reality and the theory. I think it is the responsibility of designers to find an optimum within the grey area, considering best of both sides.

My very last remark is that I enjoyed the structure of this elective. The way the assignments build on top of the content and theory of its predecessor, works really well for me.

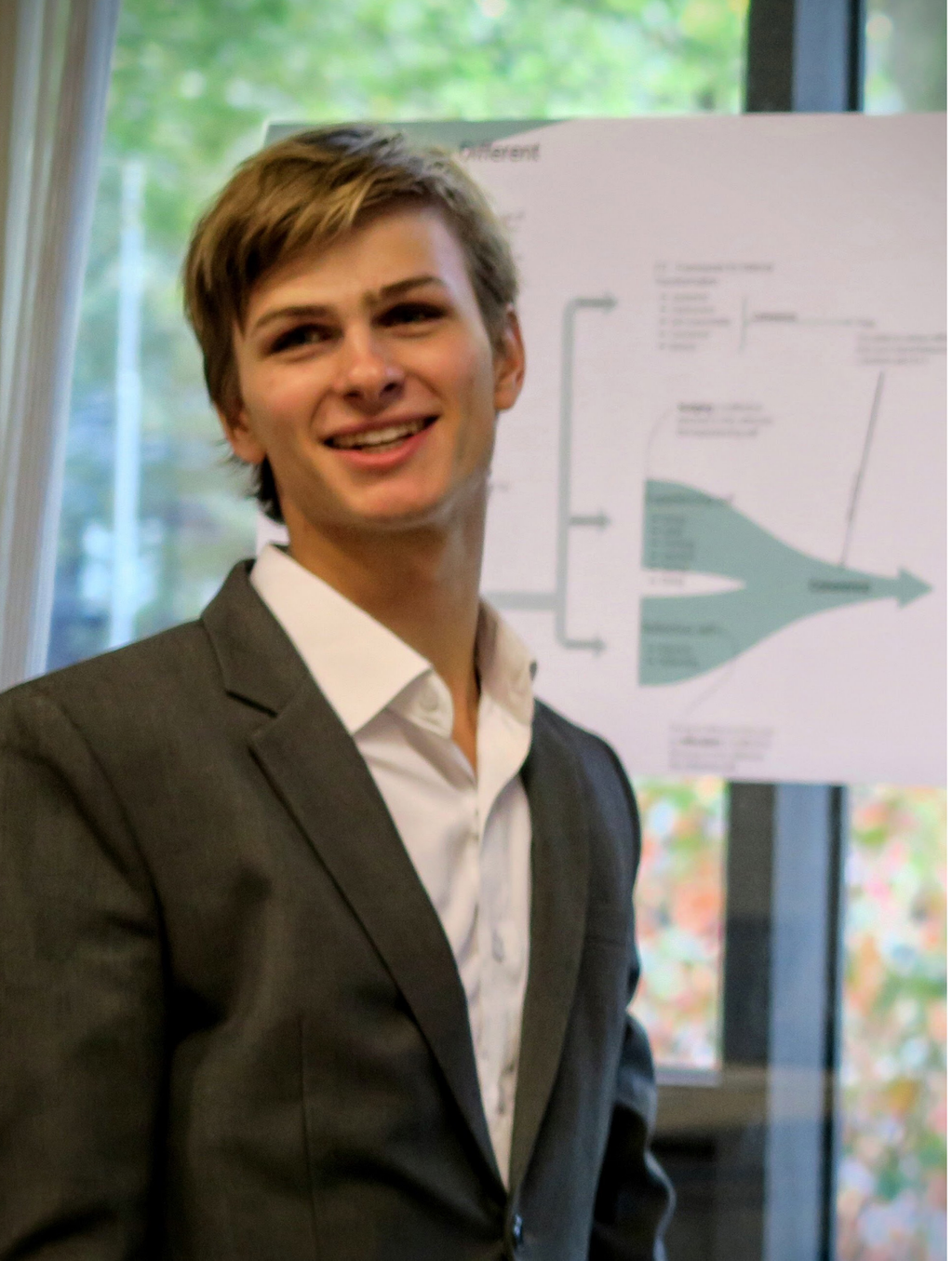

Reflection Teun

This elective helped me (re)shape my vision on rich interaction. I have always approached the concept of rich interaction somewhat skeptical, because most of the times it also means a low number of functions, like Djajadiningrat et al. point out (Djajadiningrat et al., 2002). Although this still remains my biggest critique on rich interaction, I am starting to see how it can be used despite this disadvantage. For example, small (embodied) adjustments or add-ons can be used to enrich current intangible products. An example of this is the Bt.tn (https://bt.tn/). This IoT device can be connected to one particular function of a smartphone and therefore potentially enrich the interaction with your phone a little bit. Another way integrate rich interaction in our lives is by taking things out of the smart phone again and moving more towards a reality like Weiser envisioned it in 1991, where every function would have its own controller (Weiser, 1991). In my opinion, the big advantage of a smart phone is that all you need fits in your pocket. This is of great use for all functionalities that you could need anywhere. But what about certain apps that you only use in one place (e.g. your home), like a Philips Hue, an IoT-connected refrigerator or a sound system. Why shouldn't the controllers of these products be incorporated in a smartphone, rather than a separate tangible controller?
Designing for growing systems was a great aspect of this elective and working on it helped me solve a piece of the seemingly opposites of growing systems and tangible interfaces. What I really like about the design we created is that it is possible to add a lot of new components which are all tangible and especially designed for their own purpose. However, this also comes with a problem considering the emergent functionality, which is harder to express through the product. If we would have chosen a different approach, where the two products were designed to better communicate the emergent functionality, we would immediately lose the possibility to facilitate infinite growth. Therefore I think the choice of modularity was a good one, especially from a business perspective.
I was not very focused on business during the entire elective. In design processes I am always very focused on creating products with a clear value proposition, in order to avoid creating useless products. For this elective however, I wanted to try to let this go, because I had the feeling this would interfere with the elective's learning goals. Looking back this resulted in a product that did not have a clear value for assignment 2. During class I saw how some of the other groups did succeed in making a tangible interface that also has a clear value. This made me regret my decision to completely forget about the business aspect. During the next assignment we focused a little more on a viable concept from a business perspective, and I think this really improved the quality of our design. My assumption that business and tangible interfaces interfere is perhaps partially, but definitely not completely true. I however still believe that a business focused environment limits the freedom of a designer to create tangible interfaces. It is interesting to be aware of this effect, and I hope to also be aware about this when I will be working for a company.

Reflection Tim

My first and foremost goal of being a designer is to use novel technologies to improve quality of life for people, mainly in healthcare. I am interested in target groups with unique characteristics, and the challenges and opportunities that come with them. My interest in designing for rich interaction is derived from my experiences with designing for elderly, specifically their lack of technology acceptance. Although personally I was born and raised with technology, and generally prefer efficiency over alternative methods of interaction, usability in my designs is a number one priority. My perspective on rich interaction is based on functionality, which may seem limiting but in my opinion has a potential crucial role in aforementioned usability, when applicable for the specific target group.
Reflecting on a more elaborate experience with the subject, I can see potential applications in different scenarios, beyond technology-replacing tangible interfaces for elderly. Although I am not confident that any of the concepts from this course could become feasible products, this experimental and perhaps somewhat extreme approach to rich interaction does present qualities regarding feedforward, interaction and feedback. Persuading or inviting a user to perform an action on a product, and having him or her understand its function is crucial to any product, be it physical or digital (Norman, 1999). I can understand and appreciate a physical manner of providing such cues and feedback, in order to achieve a more natural and integrated interaction with future electronic devices, in both a home context and beyond.

Regarding skill development, the fast paced iterative and hands-on approach in creating prototypes proved an insightful learning experience. Due to the requirement of tangible interaction, prototypes featured many moving objects. Even though mid-fidelity prototypes were acceptable, an urge to do better noticeably arises, with properly finished models and integrated electronics. Prototyping-wise, this approach taught me a lot, from trial and error, as well as from skills of my teammates . Furthermore, the relatively high focus on literature forced a scientific approach, with thoroughly thought through design choices and applications of previous work and research. Practice in such research can naturally be applied in my education related projects, but can provide crucial information in commercially focused projects as well. Information in general is key in all design, and information from validated scientific sources will always be a major part of that.
With respect to application in my future work, usability will remain a priority in my designs, with applied rich interaction where possible and where it is valuable. Regarding short-term, my work will focus on visually impaired, thus complicating this application due to the focus on visual information. On the other hand, the same usability issues occur and information and tangible interaction (naturally) plays an enormous role (Brock, 2017), and affordances aimed at different senses than sight will highly likely play a role in this design process.